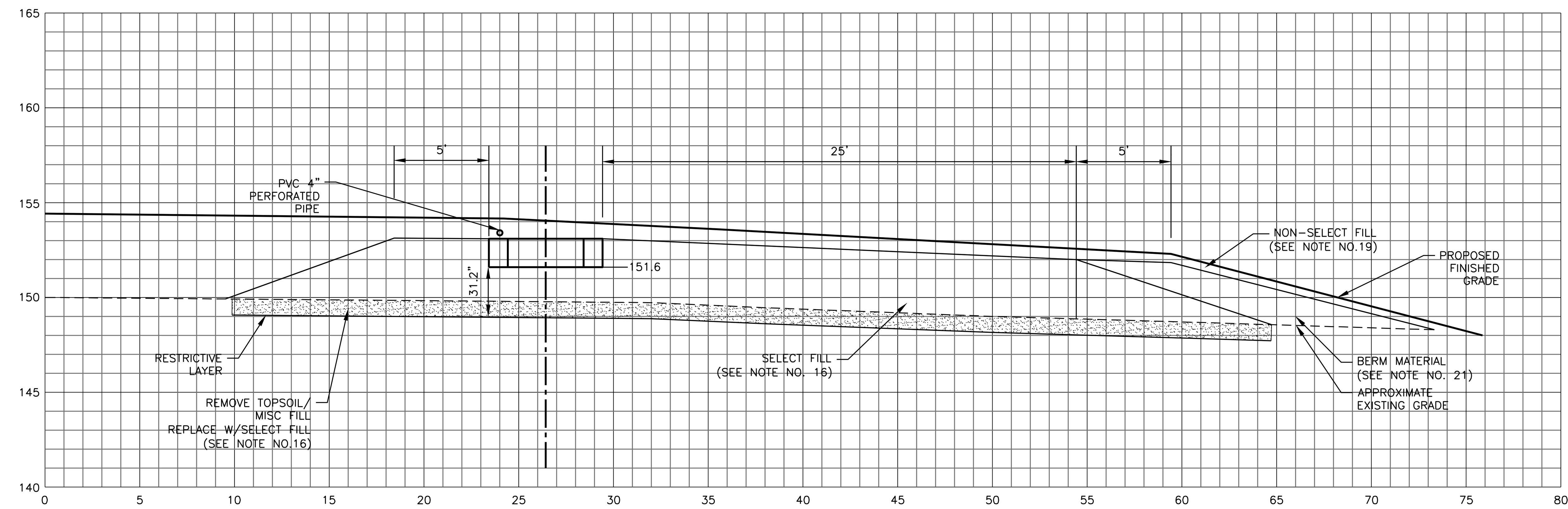

SECTION A-A

SCALE: 1"=5'

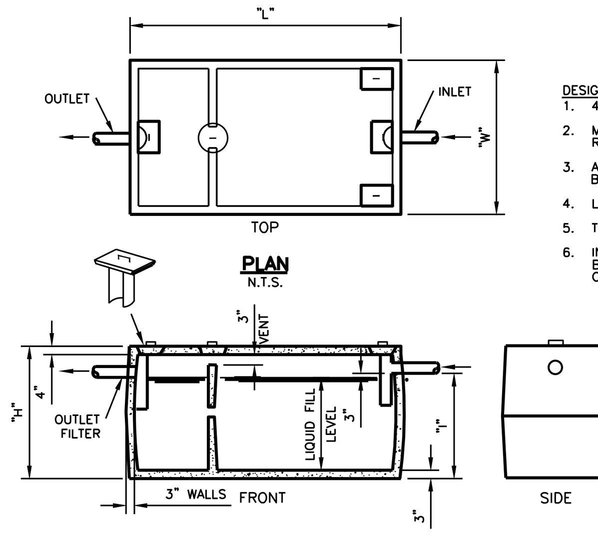

DESIGN NOTES:
1. 4000 PSI-28 DAYS
2. MEETS OR EXCEEDS STATE AND LOCAL REQUIREMENTS.
3. ALL SHIPLAP JOINTS SEALED WITH BUTYL RUBBER.
4. LOADING H10 (OR H20 OPTIONAL)
5. TWO COMPARTMENT TANK.
6. INSPECTION LID HAS CAST IN PVC BAFFLE AND IS TRANSFERABLE TO ANY OF THREE INLETS.

LIQUID CAPACITY	LENGTH "L"	WIDTH "W"	INVERT "I"	HEIGHT "H"
550	7'6"	3'8"	3'8"	4'6"
750	8'6"	4'10"	3'8"	4'6"
900	8'6"	4'10"	4'2"	5'0"
1000	8'6"	4'10"	4'6"	5'4"
1250	10'6"	5'8"	3'8"	4'6"
1500	10'6"	5'8"	4'6"	5'4"
2000	11'11"	6'6"	4'8"	5'8"

SEPTIC TANK DETAIL

N.T.S.

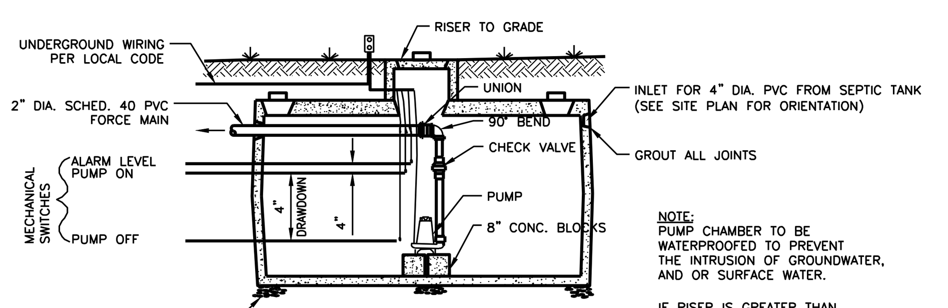

NOTE:
PUMP CHAMBER TO BE WATERPROOFED TO PREVENT THE INTRUSION OF GROUNDWATER, AND OR SURFACE WATER.

IF RISER IS GREATER THAN 12", THE FORCE MAIN SHALL GO THRU THE RISER.

PUMP CHAMBER DETAIL

N.T.S.

NOTE:
1. 1500 GALLON PUMP CHAMBER = 34.09 GAL/INCH.
2. PUMP TO BE 8" OFF CHAMBER BOTTOM
3. 4" DRAWDOWN = 136.4 GAL/CYCLE
4. 1363.6 GALLONS OF STORAGE AFTER DISCHARGE
5. 1227.2 GALLONS AFTER HIGHWATER ALARM
6. 600 GALLONS STORAGE REQUIRED FOR ONE DAY FOR 5 BEDROOMS

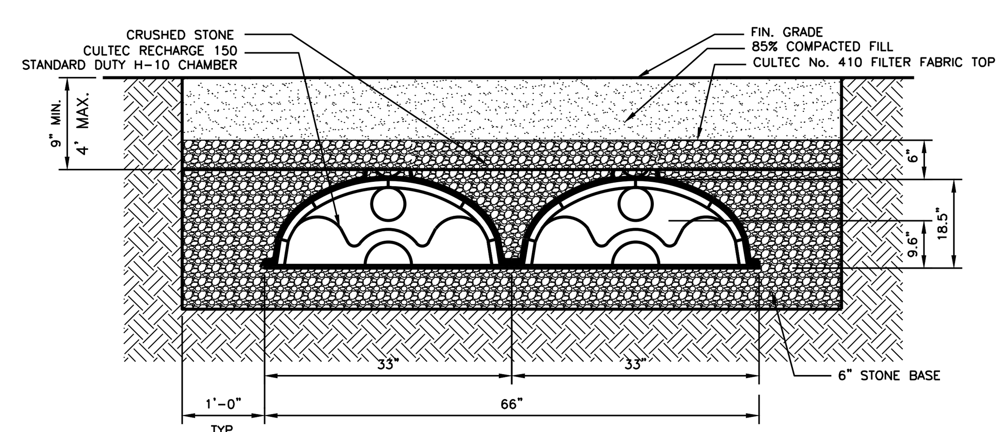

TYPICAL CROSS SECTION RECHARGER 150

SCALE: N.T.S.

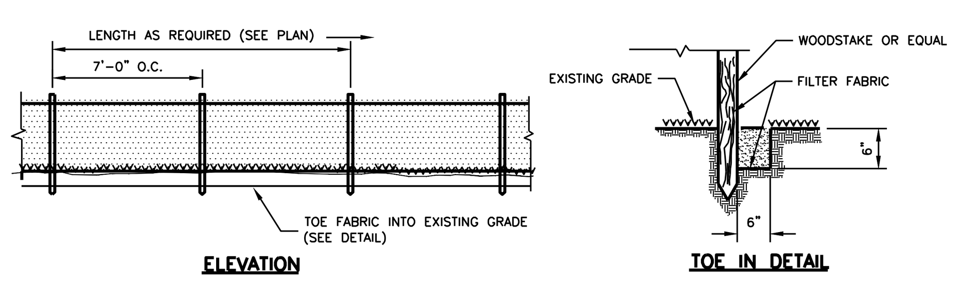

ELEVATION

TOE IN DETAIL

SILTATION FENCE DETAIL

N.T.S.

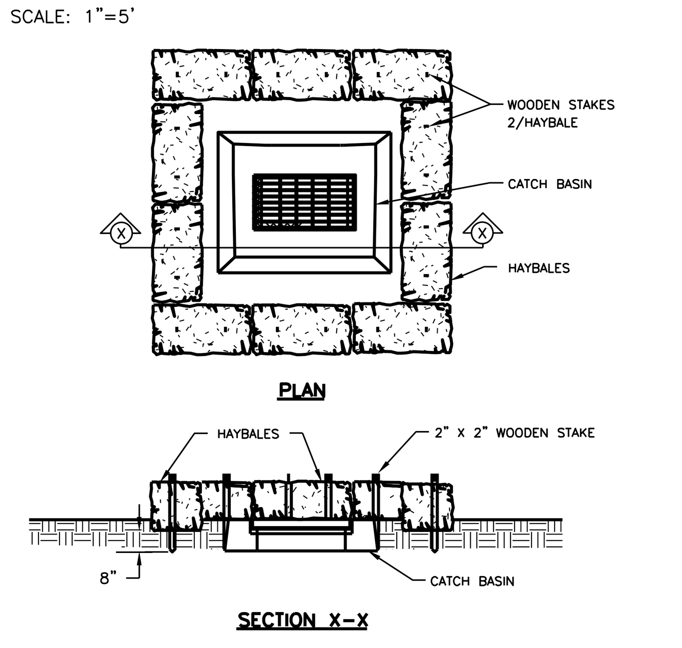

PLAN

SECTION X-X

HAYBALES AT CB

N.T.S.

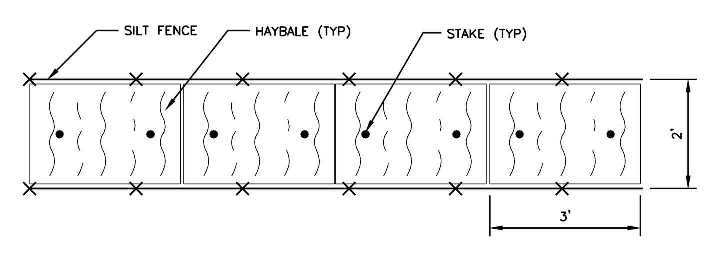

DOUBLE ROW SILT FENCE DETAIL

N.T.S.

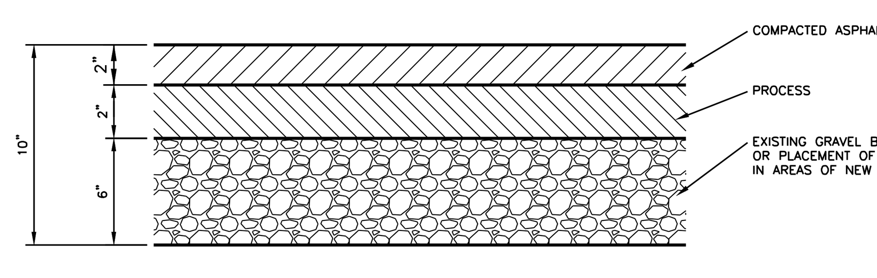

TYPICAL DRIVEWAY

N.T.S.

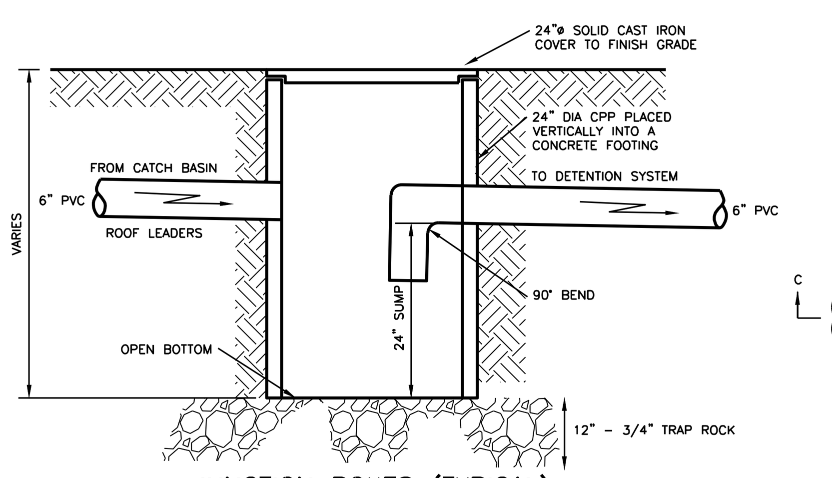

JUNCTION BOXES (TYPICAL)

N.T.S.

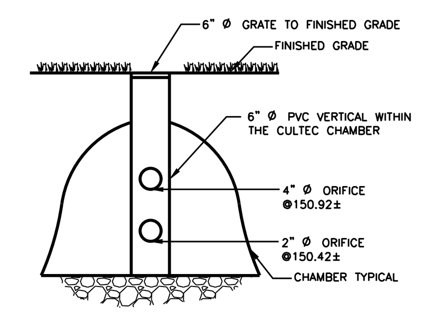

CONTROL OUTLET STRUCTURE #1

N.T.S.

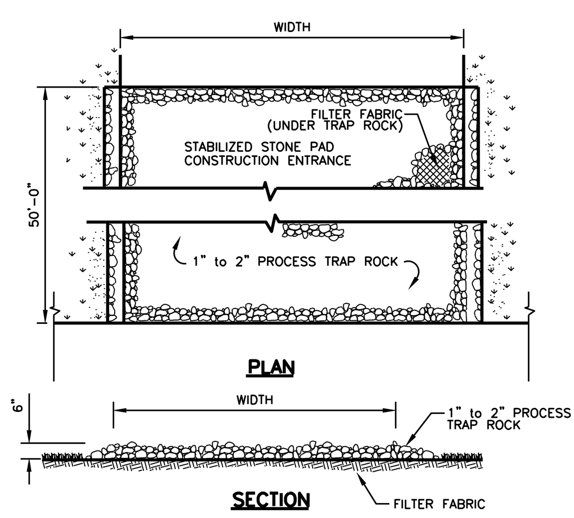

PLAN

SECTION

ANTI-TRACKING PAD DETAIL

N.T.S.

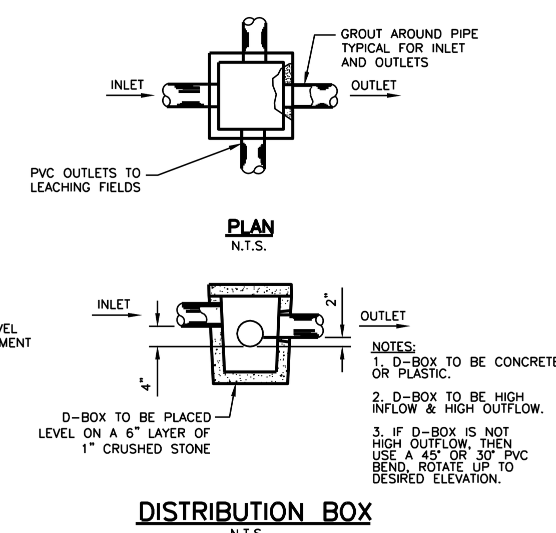

PLAN

N.T.S.

DISTRIBUTION BOX

N.T.S.

SEE SITE PLAN FOR PIPING ORIENTATION

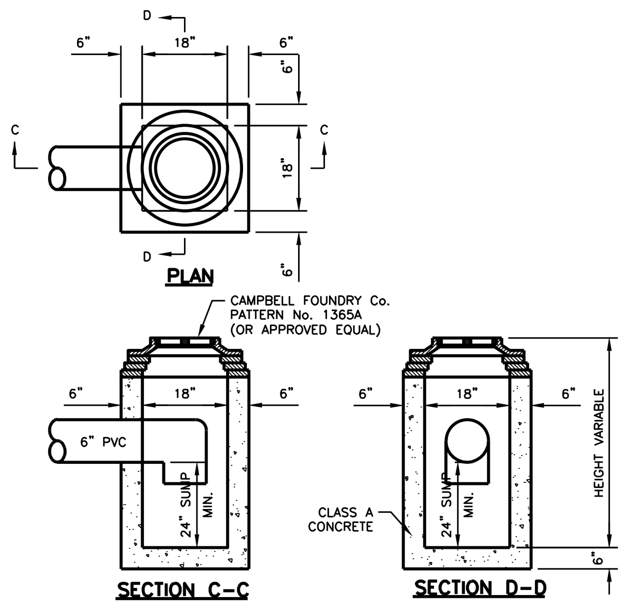

PLAN

SECTION C-C

SECTION D-D

YARD DRAIN

NOTE:
PROVIDE A 90 DEGREE ELBOW ON THE OUTLET PIPE OF EACH YARD DRAIN.

PERCOLATION TEST HOLES LOG

DATE 07/29/20

PERC HOLE P-1

DEPTH: 32 INCHES DIAMETER: 12.0 INCHES
HEAD: 12 INCHES PRESOAK: N/A A.M.

TIME	DEPTH (INCHES)	DROP (INCHES)	INTERVAL (MINUTES)	RATE (MIN./INCH)
15.18	5.50			
15.36	6.00	0.50	18.00	36.00
15.52	6.13	0.13	16.00	128.00
16.08	6.38	0.25	16.00	64.00
16.24	6.50	0.13	16.00	128.00

FINAL PERCOLATION RATE: 128.00 MIN/INCH

PERC HOLE P-2

DEPTH: 18 INCHES DIAMETER: 8.0 INCHES
HEAD: 12 INCHES PRESOAK: 09:45 A.M.

TIME	DEPTH (INCHES)	DROP (INCHES)	INTERVAL (MINUTES)	RATE (MIN./INCH)
15.20	4.75			
15.37	5.13	0.38	17.00	45.33
15.53	5.50	0.38	16.00	42.67
16.10	6.13	0.63	17.00	27.20
16.26	6.63	0.50	16.00	32.00

FINAL PERCOLATION RATE: 43.67 MIN/INCH

PERC HOLE P-3

DEPTH: 18 INCHES DIAMETER: 8.0 INCHES
HEAD: 12 INCHES PRESOAK: 09:45 A.M.

TIME	DEPTH (INCHES)	DROP (INCHES)	INTERVAL (MINUTES)	RATE (MIN./INCH)
15.20	3.25			
15.38	3.63	0.38	8.00	48.00
15.54	4.25	0.63	16.00	25.60
16.10	4.63	0.38	16.00	42.67
16.27	5.13	0.50	17.00	34.00

FINAL PERCOLATION RATE: 34.00 MIN/INCH

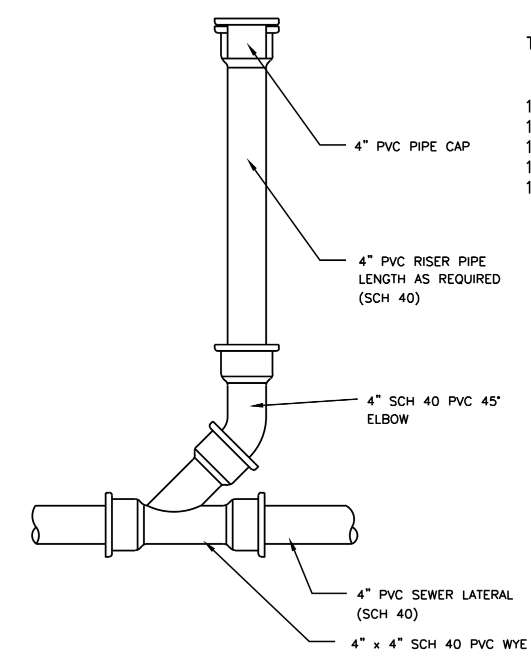

CLEANOUT DETAIL TYPICAL

N.T.S.

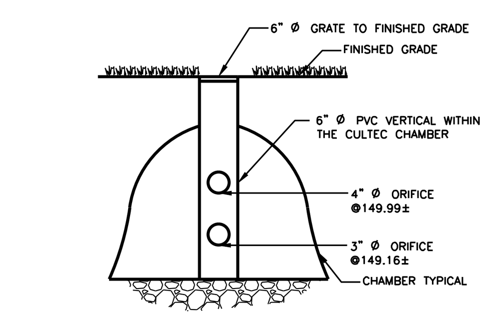

CONTROL OUTLET STRUCTURE #2

N.T.S.

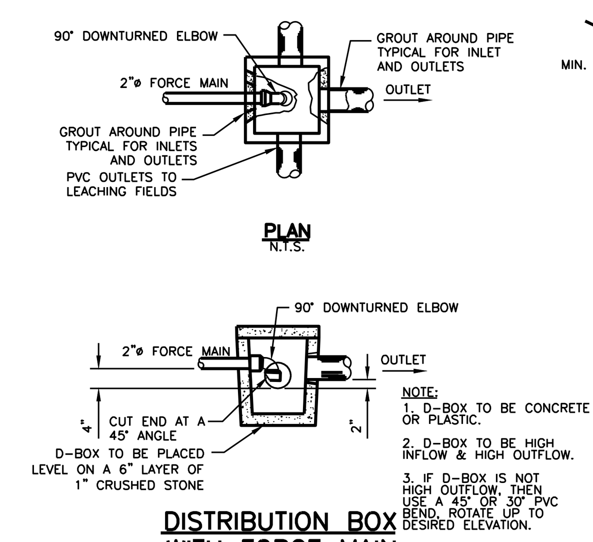

PLAN

N.T.S.

DISTRIBUTION BOX WITH FORCE MAIN

N.T.S.

SEE SITE PLAN FOR PIPING ORIENTATION

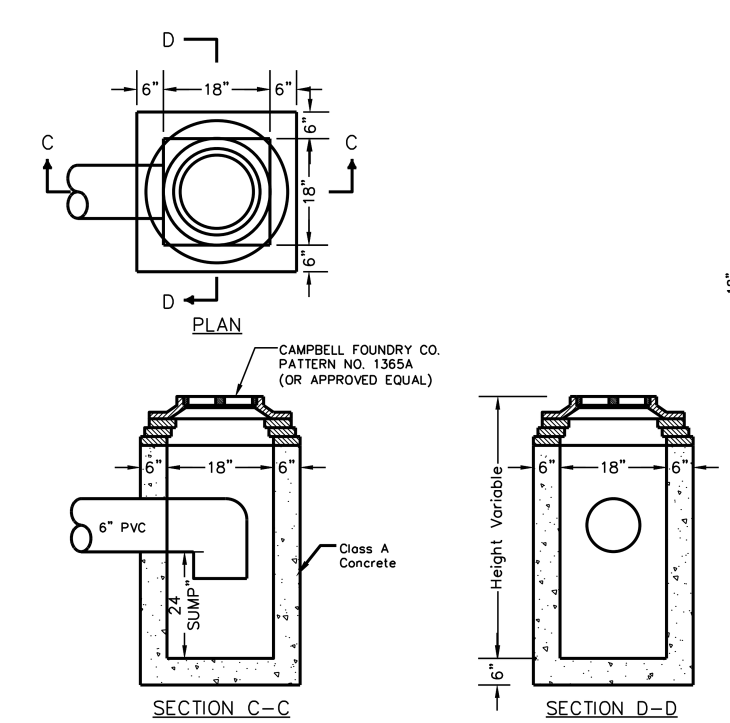

PLAN

SECTION C-C

SECTION D-D

NOTE:
PROVIDE A 90 DEGREE ELBOW ON THE OUTLET PIPE OF EACH CATCH BASIN

CATCH-BASIN

N.T.S.

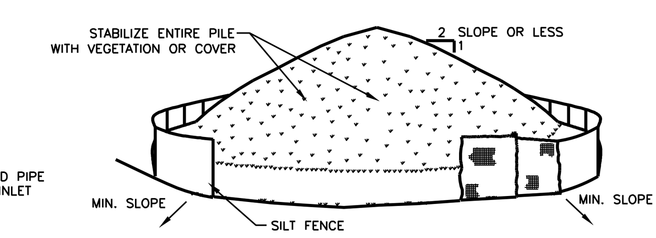

INSTALLATION NOTES:
1. AREA CHOSEN FOR STOCKPILING OPERATIONS SHALL BE DRY AND STABLE.
2. MAXIMUM SLOPE OF STOCKPILE SHALL BE 1:2.
3. UPON COMPLETION OF SOIL STOCKPILING, EACH PILE SHALL BE SURROUNDED WITH EITHER SILT FENCING OR STRAWBALES, THEN STABILIZED WITH VEGETATION OR COVERED.

SOIL STOCKPILING

N.T.S.

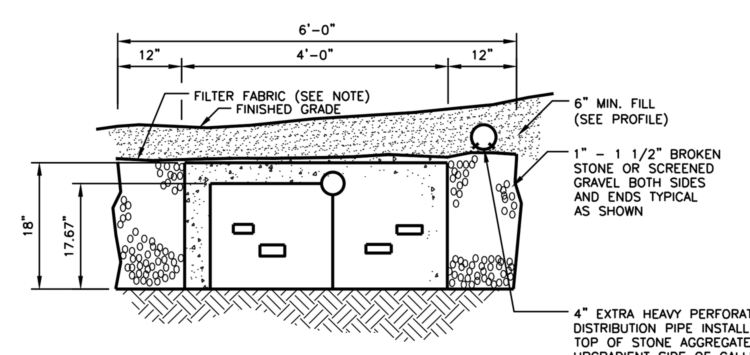

NOTE:
1. A LAYER OF NON-WOVEN FILTER FABRIC SHALL BE PLACED OVER ALL STONE USED IN LEACHING SYSTEM CONSTRUCTION BEFORE BACKFILLING. MINIMUM PHYSICAL PROPERTIES FOR FABRIC SHALL BE 1.5 OZ./SY (PER ASTM-D-3776) AND A FLUX OF 100 GAL/SF MIN. (PER ASTM D-4491). NON-WOVEN FILTER FABRIC USED FOR COVERING SYSTEM SHALL BEAR THE APPROPRIATE ASTM CERTIFICATION VERIFYING COMPLIANCE WITH THE ABOVE STANDARD AND BE READILY VISIBLE TO FACILITATE INSPECTION. APPROVED FILTER FABRICS INCLUDE THE FOLLOWING:
   TERRA TEX 501.5 FABRIC
   TYPAR 3151 FABRIC
   MIRAFI #65303
   #65304
   CULTEC #410 FILTER FABRIC
2. ONE INCH BROKEN STONE OR SCREENED GRAVEL MEANS NOT LESS THAN THREE-QUARTERS INCH AND NOT LARGER THAN TWO INCHES AND FREE OF SILT, DIRT, OR DEBRIS.

18" PRECAST GALLERY

N.T.S.

DEEP TEST HOLES LOG

DATE 07/29/30

DEEP TEST HOLE #1 (MONITORING WELL)

0" - 18" MISC FILL
18" - 27" ORG TOPSOIL
27" - 38" GRAY MOTTLED SILTY LOAM
38" - 78" GRAY SANDY GRAVEL MOD COMP
NO LEDGE
GROUNDWATER @ 73"
MOTTLING @ 38"
ROOTS TO 18"

DEEP TEST HOLE #2 (MONITORING WELL)

0" - 7" MISC FILL
7" - 28" DARK BROWN MOTTLED SILTY LOAM
28" - 72" GRAY SANDY GRAVEL MOD COMP
NO LEDGE
GROUNDWATER @ 67"
MOTTLING @ 12"
ROOTS TO 15"

DEEP TEST HOLE #3(MONITORING WELL)

0" - 8" MISC FILL
8" - 18" DARK BROWN SILTY LOAM
18" - 24" GRAY SILTY LOAM
24"- 86" GRAY MOTTLED LOAM
NO LEDGE
GROUNDWATER @ 77"
MOTTLING @ 24"
ROOTS TO 30"

DEEP TEST HOLE #4

0" - 11" MISC FILL
11" - 19" GRAY MOTTLED SILTY LOAM
19" - 26" DARK BROWN MOTTLED SILTY LOAM
26" - 54" GRAY MOTTLED SILTY LOAM
54"- 64" MEDIUM SAND
NO LEDGE
NO GROUNDWATER
MOTTLING @ 11"
ROOTS TO 18"

DEEP TEST HOLE #5

0" - 15" DARK BROWN SILTY LOAM
15" - 48" GRAY MOTTLED SILTY LOAM
NO LEDGE
NO GROUNDWATER
MOTTLING @ 12"

DEEP TEST HOLE #6

0" - 7" MISC FILL
7" - 18" DARK BROWN SILTY LOAM1
8" - 48" GRAY HARDPAN
NO LEDGE
NO GROUNDWATER
MOTTLING @ 17"

DEEP TEST HOLE #4A(MONITORING WELL)

0" - 12" MISC FILL
12" - 22" DARK BROWN MOTTLED SILTY LOAM
22" - 56" GRAY MOTTLED LOAM
56"- 72" GRAY SANDY GRAVEL MOD COMP
NO LEDGE
GROUNDWATER @ 72"
MOTTLING @ 12"
ROOTS TO 15"

DEEP TEST HOLE #7

0" - 7" MISC FILL
MOTTLING @ 7"
(STOPPED DIGGING DUE TO SHALLOW MOTTLING)

DEEP TEST HOLE #8

0" - 15" MISC FILL
MOTTLING @ 15"
(STOPPED DIGGING DUE TO SHALLOW MOTTLING)

DEEP TEST HOLE #9(MONITORING WELL)

0" - 6" TOPSOIL
6" - 77" GRAY MOTTLED SILTY LOAM
NO LEDGE
NO GROUNDWATER
MOTTLING @ 11"
ROOTS TO 10"

DEEP TEST HOLE #10(MONITORING WELL)

0" - 16" DARK BROWN SILTY LOAM
16" - 85" GRAY MOTTLED SILTY LOAM
NO LEDGE
NO GROUNDWATER
MOTTLING @ 16"
ROOTS TO 10"

DEEP TEST HOLE #11(MONITORING WELL)

0" - 14" MISC FILL
14" - 94" GRAY SILTY LOAM
NO LEDGE
GROUNDWATER @ 91"
MOTTLING @ 19"
ROOTS TO 29"

DEEP TEST HOLE #12(MONITORING WELL)

0" - 10" TOPSOIL
10" - 22" TAN MOTTLED SILTY LOAM
22" - 43" GRAY MOTTLED LOAM
43"- 60" MOTTLED MEDIUM SAND
60" - 98" GRAY SILTY LOAM
NO LEDGE
GROUNDWATER @ 62"
MOTTLING @ 12"
ROOTS TO 13"

DEEP TEST HOLE #13(MONITORING WELL)

0" - 5" TOPSOIL
5" - 31" TAN MOTTLED SILTY LOAM
31" - 59" MEDIUM MOTTLED SAND
59"- 89" GRAY SANDY LOAM
NO LEDGE
GROUNDWATER @ 70"
MOTTLING @ 13"
ROOTS TO 27"

DEEP TEST HOLE #14(MONITORING WELL)

0" - 13" TOPSOIL
13" - 31" DARK BROWN SILTY LOAM
31" - 103" GRAY MOTTLED SILTY LOAM
NO LEDGE
GROUNDWATER @ 99"
MOTTLING @ 17"
ROOTS TO 31"

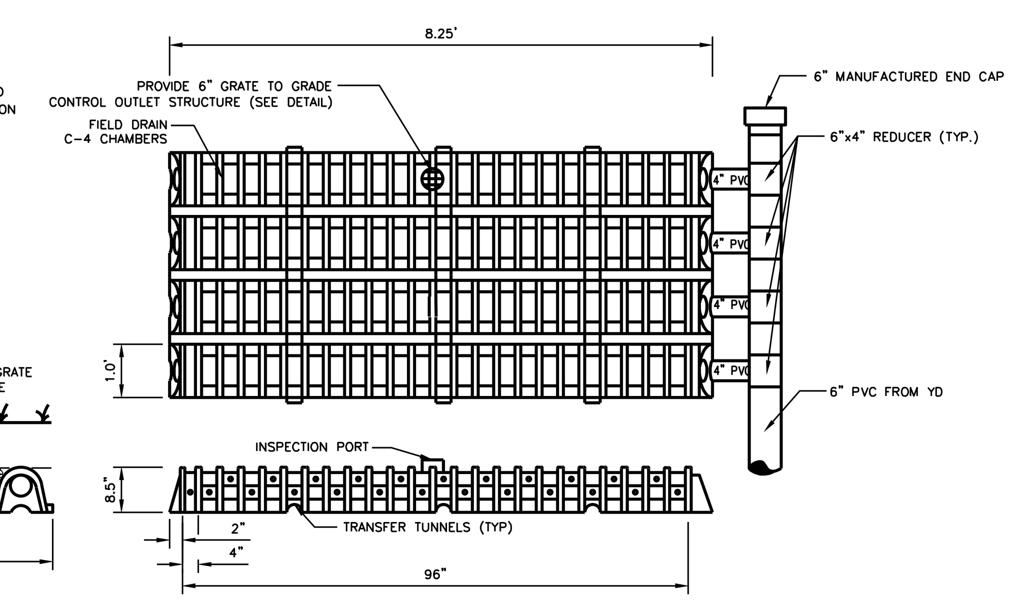

FIELD DRAIN C-4

N.T.S.

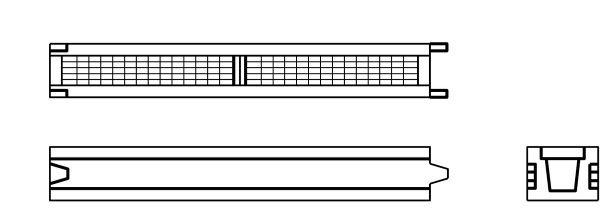

SIDE VIEW

END VIEW

PRODUCT NDS MINI CHANNEL DRAIN OR EQUAL AROUND POOL
PRODUCT NDS 8" MODULAR PRO SERIES OR EQUAL FOR DRIVEWAY

CHANNEL DRAIN (TYPICAL)

N.T.S.

MLSS REQUIREMENT

No. OF BEDROOMS	PERCOLATION RATE DESIGN	LIMITING FACTORS: LEDGE (INCHES)	LIMITING FACTORS: HARDPAN (INCHES)	LIMITING FACTORS: MOTTLING (INCHES)	GROUNDWATER (INCHES)	HYDRAULIC FACTOR: SLOPE (%)	HYDRAULIC FACTOR: (HF)	HYDRAULIC FACTOR: DEPTH (INCHES)	FLOW FACTOR (FF)	PERCOLATION FACTOR (PF)	MLSS (FEET) (HF*FF*PF)	ACTUAL SPREAD (FEET)	ELA SF (REQUIRED)	ELA SF (PROVIDED)
5	30.1 - 45	NONE	NONE	5 ADJUSTED	62	2.7	54	18.1-22	2	2	216		1200	
ADJUSTED MLSS														
5	10.1 - 20	NONE	NONE			2.7	24	48.1-60	2	2	96	140	950	980

SYSTEM
DT #9 = 11
DT #11 = 5
DT #14 = 17

(11+5+17)/3=11
AVERAGE OF SYSTEM
11.00

RECEIVING SOILS
DT #10 = 16
DT #12 = 12
DT #13 = 13

(16+12+13)/3=13.67
AVERAGE OF RECEIVING
13.67

ADJUSTED HYDRAULLIC FACTOR
12.33

(11+13.67)/2=12.33

NOTE: ELA IS BASED ON THE SYSTEM BEING IN ALL SELECT FILL. ADDING SELECT FILL 25 FEET DOWN GRADIENT OF THE SYSTEM. ADJUSTED THE HF BY ADDING SELECT FILL UNDER THE SYSTEM.

ADJUSTED THE HF: 18" PRODUCT HEIGHT
12.3" AVERAGE DEPTH OF RESTRICTIVE LAYER
20" ADDITION SELECT FILL
TOTAL ADJUSTED DEPTH = 50.3" FOR HF

IMPORTANT NOTE:
Additional underground utilities may exist Prior to any excavation or construction. Contact:
"CALL BEFORE YOU DIG"
1-800-922-4455

NO.	DATE	REV. BY	DESCRIPTION
1	09/14/20	SDI	FOR SUBMISSION TO HEALTH DEPARTMENT

ISSUE / REVISION

DiVesta
Civil Engineering Associates, Inc.
51 Painter Ridge Road
Roxbury, Connecticut 06783
Phone 860-354-4226 Fax 860-354-4226
E- mail dceainc@charter.net

PROJECT TITLE:
GJYLIQI RESIDENCE
16 OX RIDGE ROAD
DARIEN, CONNECTICUT
DETAILS

STAMP:

NOT VALID WITHOUT ORIGINAL SEAL AND SIGNATURE

DRAWING NO. 20-050
DRAWN BY: SDI
APPROVED BY: DD
SCALE: AS NOTED
DRAWING DATE: 09/14/20
SHEET NO. 2 OF 2