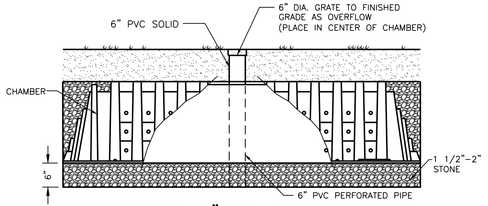

TYPICAL 6" DIA. OVERFLOW

N.T.S.

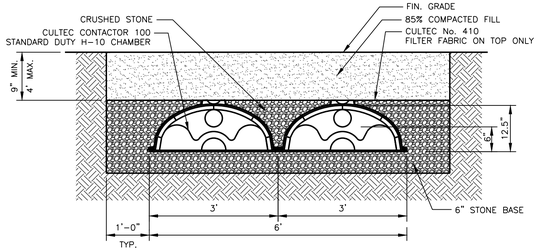

TYPICAL CROSS SECTION CONTACTOR 100

SCALE: N.T.S.

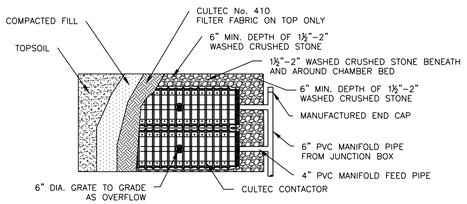

CONTACTOR 100 RETENTION SYSTEM (TYP)

SCALE: N.T.S.

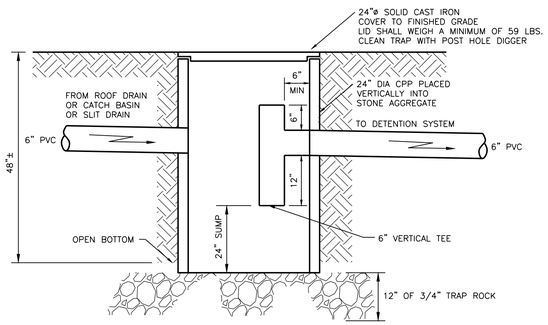

TYPICAL JUNCTION BOX

N.T.S.

NOTE:
1. SEE SITE PLAN FOR PIPE ORIENTATION INTO JUNCTION BOX.

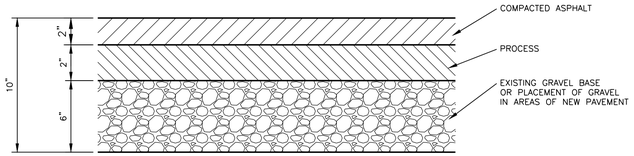

TYPICAL DRIVEWAY

N.T.S.

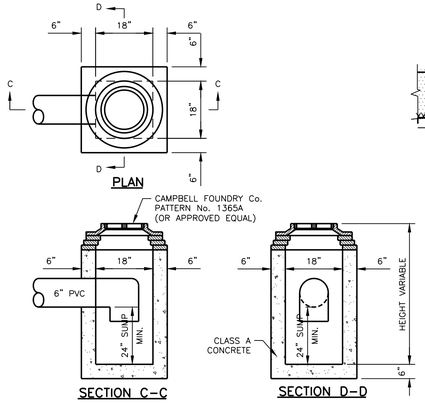

YARD DRAIN

N.T.S.

NOTE:
PROVIDE A 90 DEGREE ELBOW ON THE OUTLET PIPE OF EACH YARD DRAIN.

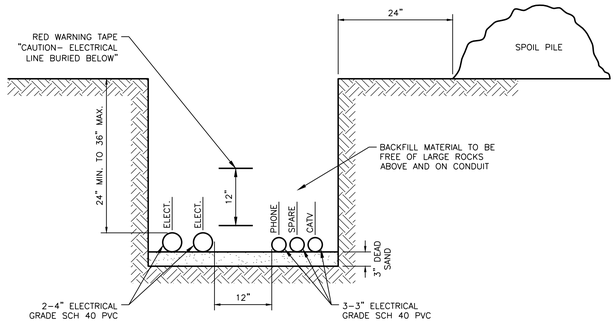

TYPICAL UTILITY TRENCH DETAIL

N.T.S.

NOTES:

1. 36" RADIUS BENDS AT POLE AND HOUSE.
2. MINIMUM 48" RADIUS SWEEPS ARE REQUIRED WITHIN THE CONDUIT RUNS.
3. CONDUIT IN TRENCH SHALL HAVE A 4" PER 100' DOWNWARD PITCH TOWARDS DISTRIBUTION FACILITY.
4. ROAD CROSSING SHALL HAVE A 30" MINIMUM BURIAL DEPTH TOP OF CONDUIT TO FINISHED GRADE.
5. WATER LINE TO BE 18" IN ALL DIRECTION FROM UTILITY LINES.

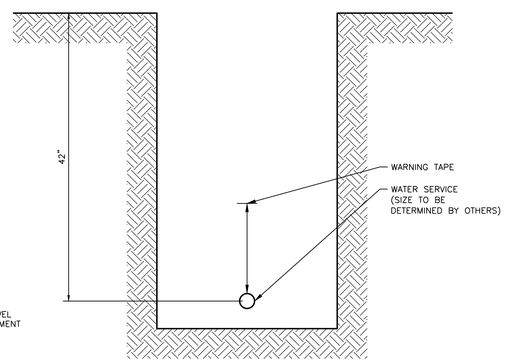

WATER SERVICE TRENCH

N.T.S.

NOTES:

1. TRENCH TO BE BACKFILLED WITH A CLEAN FILL FREE OF ANY LARGE ROCKS.

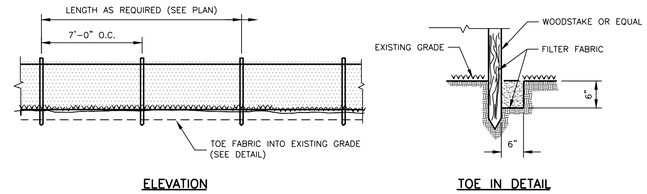

SILTATION FENCE DETAIL

N.T.S.

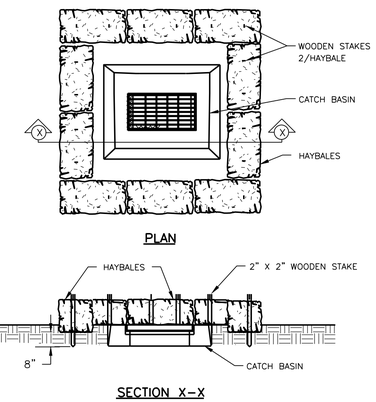

HAYBALES AT CB

N.T.S.

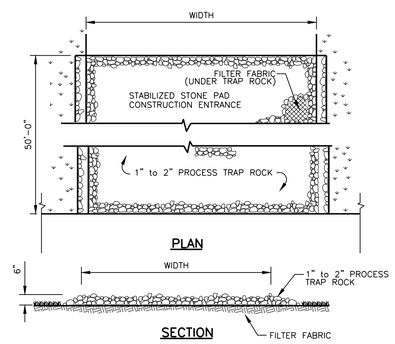

ANTI-TRACKING PAD DETAIL

N.T.S.

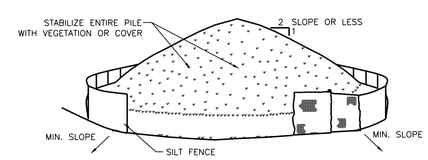

INSTALLATION NOTES:

1. AREA CHOSEN FOR STOCKPILING OPERATIONS SHALL BE DRY AND STABLE.
2. MAXIMUM SLOPE OF STOCKPILE SHALL BE 1:2.
3. UPON COMPLETION OF SOIL STOCKPILING, EACH PILE SHALL BE SURROUNDED WITH EITHER SILT FENCING OR STRAWBALES, THEN STABILIZED WITH VEGETATION OR COVERED.

SOIL STOCKPILING

N.T.S.

EROSION AND SEDIMENTATION CONTROL NOTES

1. ALL EROSION AND SEDIMENTATION CONTROLS SHALL BE CONSTRUCTED, INSTALLED AND MAINTAINED IN ACCORDANCE WITH THE 2002 CONNECTICUT GUIDELINES FOR SOIL EROSION AND SEDIMENT CONTROL AND TOWN OF DARIEN REGULATIONS.
2. ALL CONTROL MEASURES SHALL BE INSTALLED AS SHOWN ON THE PLAN(S).
3. ALL CONTROL MEASURES SHALL BE INSPECTED AND APPROVED BY THE TOWN PRIOR TO COMMENCEMENT OF ANY WORK, INCLUDING PRE-CONSTRUCTION CLEARING AND GRUBBING.
4. ALL CONTROL MEASURES SHALL BE MAINTAINED AND UPGRADED AS REQUIRED TO ACHIEVE PROPER SEDIMENT CONTROL THROUGHOUT THE CONSTRUCTION PERIOD AND UNTIL ALL DISTURBED AREAS HAVE BEEN THOROUGHLY STABILIZED.
5. NO CONTROL MEASURES SHALL BE REMOVED WITHOUT APPROVAL FROM THE TOWN.
6. ADDITIONAL CONTROL MEASURES SHALL BE INSTALLED DURING THE CONSTRUCTION PERIOD IF DEEMED NECESSARY BY THE TOWN OR ITS AUTHORIZED AGENT.
7. THE LIMITS OF CLEARING, GRADING AND DISTURBANCE, AS SHOWN ON THE PLAN(S), SHALL BE KEPT TO A MINIMUM WITHIN THE APPROVED AREA OF CONSTRUCTION. ALL AREAS OUTSIDE THE LIMITS OF CLEARING SHALL REMAIN TOTALLY UNDISTURBED.
8. ANY CONTROL MEASURES RETAINING SEDIMENT OVER ½ THEIR HEIGHT SHALL HAVE THE SEDIMENT IMMEDIATELY REMOVED, AND ALL DAMAGED CONTROL MEASURES SHALL BE REMOVED AND REPLACED.
9. ALL CATCH BASINS LOCATED DOWN-GRADE OF THE SITE SHALL BE PROTECTED BY PLACING FILTER FABRIC BENEATH THE GRATE UNTIL ALL DISTURBED AREAS HAVE BEEN THOROUGHLY STABILIZED.
10. ALL NEW AND EXISTING CATCH BASINS LOCATED ON THE SITE SHALL BE PROTECTED BY STAKED HAYBALES AND BY PLACING FILTER FABRIC BENEATH THE GRATE UNTIL ALL DISTURBED AREAS HAVE BEEN THOROUGHLY STABILIZED.
11. ALL SEDIMENT SHALL BE IMMEDIATELY REMOVED FROM NEW AND EXISTING DRAINAGE STRUCTURES AND PIPING IMPACTED BY THE PROPOSED CONSTRUCTION.
12. SEDIMENT REMOVED FROM CONTROL MEASURES AND DRAINAGE FACILITIES SHALL BE DISPOSED OF IN A MANNER THAT IS CONSISTENT WITH STATE AND LOCAL REGULATIONS.
13. THE PLANTING SEASONS FOR THE SPECIFIED SEED MIXTURE SHALL BE AS DEFINED IN THE 2002 CONNECTICUT GUIDELINES FOR SOIL EROSION AND SEDIMENT CONTROL, UNLESS DIRECTED OTHERWISE BY THE TOWN. OUTSIDE OF THESE SPECIFIED DATES, AREAS WILL BE STABILIZED WITH HAYBALE CHECK DAMS, FILTER FABRIC, OR WOODCHIP MULCH AS REQUIRED TO CONTROL EROSION.
14. THE CONTRACTOR SHALL TAKE ALL NECESSARY MEASURES TO ENSURE THAT NO DRAINAGE FROM TOWN ROADS ENTERS THE SITE DURING OR AFTER CONSTRUCTION.
15. THE CONTRACTOR SHALL BE RESPONSIBLE TO CONTROL DUST AND WIND EROSION THROUGHOUT THE LIFE OF THE CONTRACT. THE CONTRACTOR SHALL CONTROL DUST TO PREVENT A HAZARD TO TRAFFIC ON ADJACENT ROADWAYS.
16. TEMPORARY STOCKPILING OF CONSTRUCTION MATERIALS SHALL ONLY BE ALLOWED IN THE LOCATIONS SHOWN ON THE PLAN(S). STOCKPILE AREAS SHALL BE FULLY ENCLOSED BY SILT FENCE.
17. ALL GROUNDWATER EXTRACTED DURING DEWATERING OF EXCAVATIONS SHALL BE DIRECTED TO A TEMPORARY SEDIMENTATION BASIN.
18. THE CONTRACTOR SHALL BE RESPONSIBLE FOR IMPLEMENTING THE EROSION AND SEDIMENTATION CONTROL PLAN. THIS INCLUDES THE INSTALLATION AND MAINTENANCE OF ALL CONTROL MEASURES, INFORMING ALL PARTIES ENGAGED ON THE CONSTRUCTION SITE OF THE REQUIREMENTS AND OBJECTIVES OF THE PLAN, AND NOTIFYING THE TOWN OF ANY TRANSFER OF THIS RESPONSIBILITY.

MAP 53 LOT 45

IMPORTANT NOTE:

Additional underground utilities may exist
Prior to any excavation or construction,
Contact:

"CALL BEFORE YOU DIG"
1-800-922-4455

NO.	DATE	REV. BY	DESCRIPTION
1	3/20/20	JOP	FOR SUBMISSION TO EPC

ISSUE / REVISION

DiVesta
Civil Engineering Associates, Inc.

51 Painter Ridge Road
Roxbury, Connecticut 06783
Phone 860-354-4226 Fax 860-354-4226
E-mail dceainc@charter.net

PROJECT TITLE:

BRENNAN RESIDENCE

22 SEAGATE ROAD
DARIEN, CONNECTICUT

DETAILS

STAMP:

NOT VALID WITHOUT ORIGINAL SEAL AND SIGNATURE

DRAWING NO. 20-025	
DRAWN BY: JOP	APPROVED BY: DD
SCALE: AS NOTED	DRAWING DATE: 3/20/2020
SHEET NO. 2 OF 2	