GENERAL CONCRETE NOTES

1. CONCRETE SHALL HAVE A MINIMUM COMPRESSIVE STRENGTH OF 3000 PSI IN 28DAYS (3500 PSI FOR CONCRETE USED IN SLAB) AND WHERE EXPOSED TO EXTERIOR TO BE AIR ENTRANED (6%). DO NOT PROVIDE AIR ENTRANEMENT FOR CONCRETE USED IN SLAB RECEIVING MACHINE TROWELED FINISH.
2. REINFORCEMENT SHALL CONFORM TO ASTM 615, GRADE 60.
3. "BUILDING CODE REQUIREMENTS FOR REINFORCED CONCRETE", LATEST EDITION OF ACI 318 SHALL BE ADHERED TO.
4. MINIMUM LAP, SPLICE AND EMBEDMENT LENGTH SHALL BE AS FOLLOWS: #4 = 24", #5 = 30", #6 = 36". MINIMUM HOOK TO BE 6".
5. CHAMFER / EASE EXPOSED EDGES 3/4".
6. CONCRETE COVER FOR REINFORCING STEEL = 2" TYPICAL, 3" FOR CONCRETE @ GROUND.
7. CALCIUM CHLORIDE WILL NOT BE ALLOWED.
8. DESIGN OF FOUNDATION IS BASED ON ASSUMED SAFE SOIL BEARING PRESSURE OF 3000 PSF TO BE CONFIRMED DURING CONSTRUCTION.
9. CONTRACTOR IS SOLELY RESPONSIBLE FOR ALL TEMPORARY SHORING UNTIL STRUCTURE IS COMPLETE.
10. SLABS TO HAVE SAWCUT CONTROL JOINTS WITHIN 18 HOURS AFTER CASTING. SPACING TO BE 22.5' ± C-C CREATING PANELS WITH AN ASPECT RATIO OF 1.25 MAXIMUM.
11. EXPOSED CONCRETE SURFACES TO HAVE SMOOTH, CLEAN, AND STRAIGHT / ALIGNED FINISHED SURFACES.

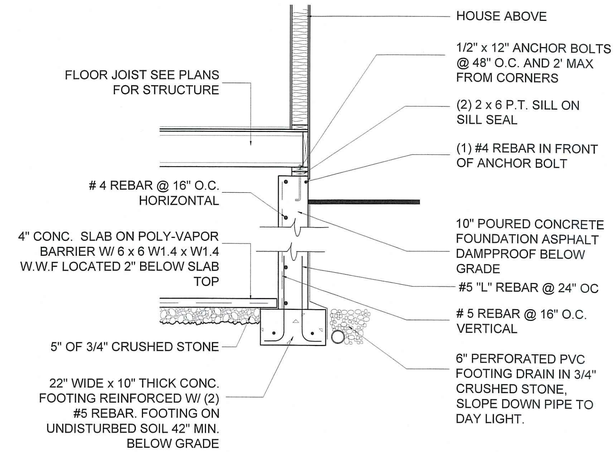

1 / A-0 FOUNDATION / FOOTING DETAIL
SCALE: 1/2" = 1'-0"

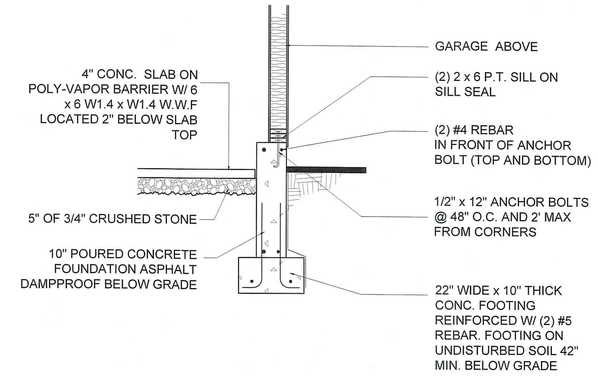

2 / A-0 FOUNDATION / FOOTING DETAIL
SCALE: 1/2" = 1'-0"

This document, ideas and designs incorporated herein, as an instrument of the professional service, is the property of PB Architects Inc. and is not be used, in whole or part for any other project without the written authorization of PB Architects Inc.

PB ARCHITECTS
110 Post Road
DARIEN, CT 06820
Phone: 203 655 4271
www.pbarchitects.net

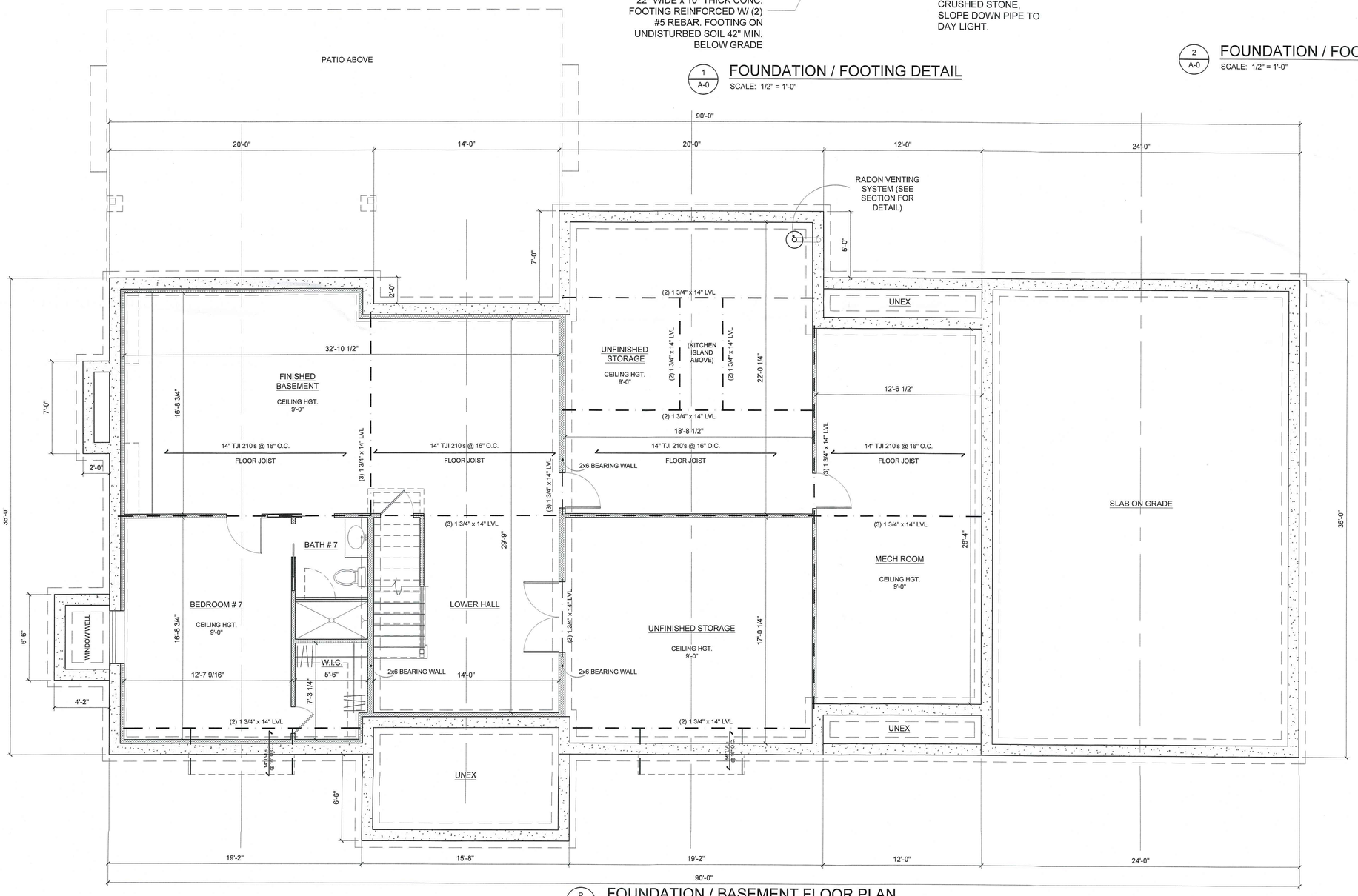

P / A-0 FOUNDATION / BASEMENT FLOOR PLAN
SCALE: 1/4" = 1'-0"

CONSULTANTS:

	ISSUES AND REVISIONS	DATE
1	PROPOSED DESIGN DWGS.	03/16/2020
2	FOUNDATION PERMIT DWGS.	03/23/2020
3		
4		
5		
6		
7		
8		
9		
10		

NEW RESIDENCE CONSTRUCTION:

K&C BUILDERS
14 HAMILTON LANE
DARIEN, CT 06820

FOUNDATION / BASEMENT FLOOR PLAN
SCALE: AS NOTED

0 1 2 3 4 FEET

CALLED NORTH

DWG NO.

A-0

X:\Drawings\2020\14 Hamilton\14 Hamilton Ln - Foundation Permit.dwg, 3/23/2020 5:51:44 PM, PB Architects